1. General Description

A: SPECIFICATION

Model		Others	WRX	STI
Front disc brake	Size	15-inch type	16-inch type	17-inch type
	Type	Disc (Floating type, ventilated)	Disc (Fixed type, ventilated)	
	Effective disc diameter	228 mm (8.98 in)	255 mm (10.04 in)	268 mm (10.55 in)
	Disc thickness × Diameter	24 × 277 mm (0.94 × 10.91 in)	24 × 294 mm (0.94 × 11.57 in)	30 × 326 mm (1.18 × 12.83 in)
	Effective cylinder diameter	42.8 mm (1.685 in) × 2	40.4 mm (1.591 in) × 4	40.0 mm × 2, 46.0 mm × 2 (1.575 in × 2, 1.811 in × 2)
	Pad dimensions (Length × Width × Thickness)	117.8 × 50.5 × 11.0 mm (4.638 × 1.988 × 0.433 in)	116.0 × 47.7 × 10.0 mm (4.567 × 1.878 × 0.394 in)	129.8 × 60.5 × 9.2 mm (5.110 × 2.382 × 0.362 in)
	Clearance adjustment	Automatic adjustment		
Rear Disc Brake	Size	14-inch type	15-inch type	17-inch type
	Type	Disc (Floating type)	Disc (Fixed type, ventilated)	
	Effective disc diameter	230 mm (9.06 in)	261 mm (10.28 in)	268 mm (10.55 in)
	Disc thickness × Diameter	10 × 266 mm (0.39 × 10.47 in)	18 × 290 mm (0.71 × 11.42 in)	20 × 316 mm (0.79 × 12.44 in)
	Effective cylinder diameter	38.1 mm (1.500 in)		36.0 mm (1.417 in)
	Pad dimensions (Length × Width × Thickness)	89.4 × 33.7 × 9.0 mm (3.520 × 1.327 × 0.354 in)	71.8 × 35.0 × 11.5 mm (2.827 × 1.378 × 0.453 in)	74.8 × 45.0 × 9.0 mm (2.945 × 1.772 × 0.354 in)
	Clearance adjustment	Automatic adjustment		
Master Cylinder	Type	Tandem		
	Effective outer diameter	26.99 mm (1-1/16 in)	25.4 mm (1 in)	26.99 mm (1-1/16 in)
	Reservoir type	Sealed type		
	Brake fluid reservoir capacity	205 cm^3 (12.51 cu in)		
Brake Booster	Type	Vacuum suspended		
	Effective outer diameter	205 + 230 mm (8.07 + 9.06 in)		
Brake line		Dual circuit system		
Brake fluid **CAUTION:** **• Avoid mixing brake fluid of different brands to prevent fluid performance from degrading.** **• When filling with brake fluid, be careful not to allow any dust to enter the reservoir.** **• Use new DOT 3 brake fluid when replacing or refilling the fluid.**		FMVSS No. 116, DOT3, or DOT4		

NOTE:
Refer to the “PB section” for parking brake specifications. <Ref. to PB-2, SPECIFICATION, General Description.>

Contents			Standard	Limit
Front brake	Pad thickness	15″	11 mm (0.43 in)	1.5 mm (0.059 in)
		16″	10 mm (0.393 in)	1.5 mm (0.059 in)
		17″	9.2 mm (0.362 in)	1.2 mm (0.047 in)
	Disc thickness	Except for 17 ″	24 mm (0.94 in)	22 mm (0.87 in)
		17″	30 mm (1.18 in)	28 mm (1.10 in)
	Disc runout		—	0.075 mm (0.0030 in)
Rear brake (disc type)	Pad thickness	14″	9.0 mm (0.354 in)	1.5 mm (0.059 in)
		15″	11.5 mm (0.452 in)	1.5 mm (0.059 in)
		17″	9.0 mm (0.354 in)	1.2 mm (0.047 in)
	Disc thickness	14″	10 mm (0.39 in)	8.5 mm (0.335 in)
		15″	18 mm (0.71 in)	16 mm (0.63 in)
		17″	20 mm (0.79 in)	18 mm (0.71 in)
	Disc runout		—	0.07 mm (0.0028 in)
Rear brake (disc type parking brake) (Except for STI model)	Inside diameter		170 mm (6.69 in)	171 mm (6.73 in)
	Lining thickness		3.2 mm (0.126 in)	1.5 mm (0.059 in)
Rear brake (disc type parking brake) (Except for STI model)	Inside diameter		190 mm (7.48 in)	191 mm (7.52 in)
	Lining thickness		3.2 mm (0.126 in)	1.5 mm (0.059 in)
Parking brake	Lever stroke		7 — 8 notches/196 N (20 kgf, 44 lbf)	

		Brake pedal operation force	Fluid pressure		
			Others	WRX	STI
Brake booster	Brake fluid pressure with engine stopped	147 N (15 kgf, 33 lbf)	588 kPa (6 kgf/cm^2, 85 psi)		
		294 N (30 kgf, 66 lbf)	1,471 kPa (15 kgf/cm^2, 213 psi)	1,667 kPa (17 kgf/cm^2, 242 psi)	1,471 kPa (15 kgf/cm^2, 213 psi)
	Brake fluid pressure and vacuum pressure with engine running at 66.7 kPa (500 mmHg, 19.69 inHg)	147 N (15 kgf, 33 lbf)	5,296 kPa (54 kgf/cm^2, 768 psi)	6,276 kPa (64 kgf/cm^2, 910 psi)	4,021 kPa (41 kgf/cm^2, 583 psi)
		294 N (30 kgf, 66 lbf)	9,120 kPa (93 kgf/cm^2, 1,323 psi)	10,200 kPa (104 kgf/cm^2, 1,479 psi)	8,336 kPa (85 kgf/cm^2, 1,209 psi)

Brake pedal	Free play	0.5 — 2 mm (0.02 — 0.08 in) Depress the brake pedal with a force of less than 10 N (1 kgf, 2 lbf).

B: COMPONENT

1. FRONT DISC BRAKE

15-inch type

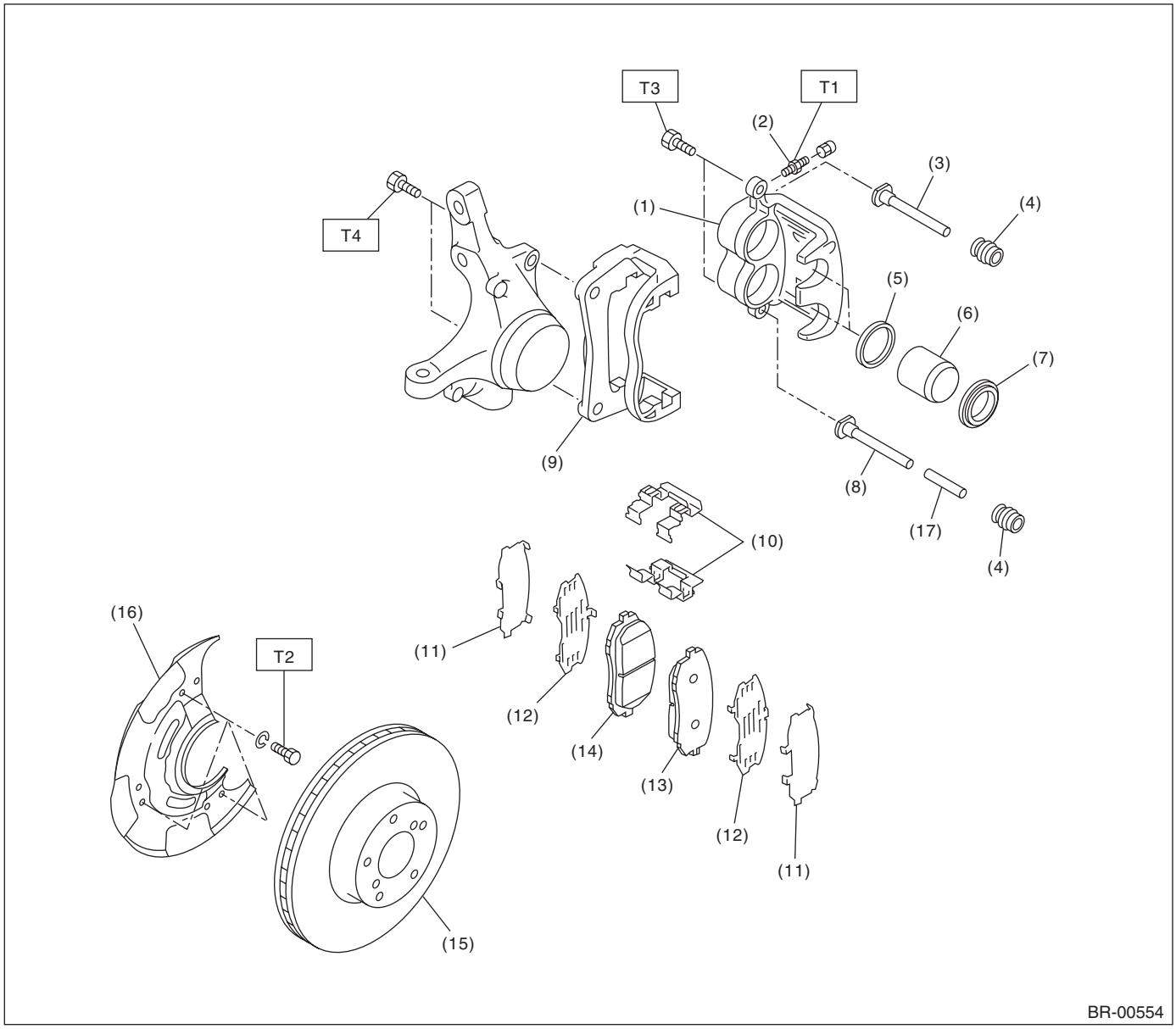

(1)	Caliper body	(9)	Support	(17)	Bushing
(2)	Air bleeder screw	(10)	Pad clip		
(3)	Guide pin (Green)	(11)	Outer shim		
(4)	Pin boot	(12)	Inner shim		
(5)	Piston seal	(13)	Pad (Outside)		
(6)	Piston	(14)	Pad (Inside)		
(7)	Piston boot	(15)	Disc rotor		
(8)	Lock pin (Yellow)	(16)	Disc cover		

Tightening torque:N·m (kgf-m, ft-lb)

T1: 8 (0.8, 5.8)
T2: 18 (1.8, 13.0)
T3: 26.5 (2.7, 19.5)
T4: 80 (8.2, 59)

16-inch type

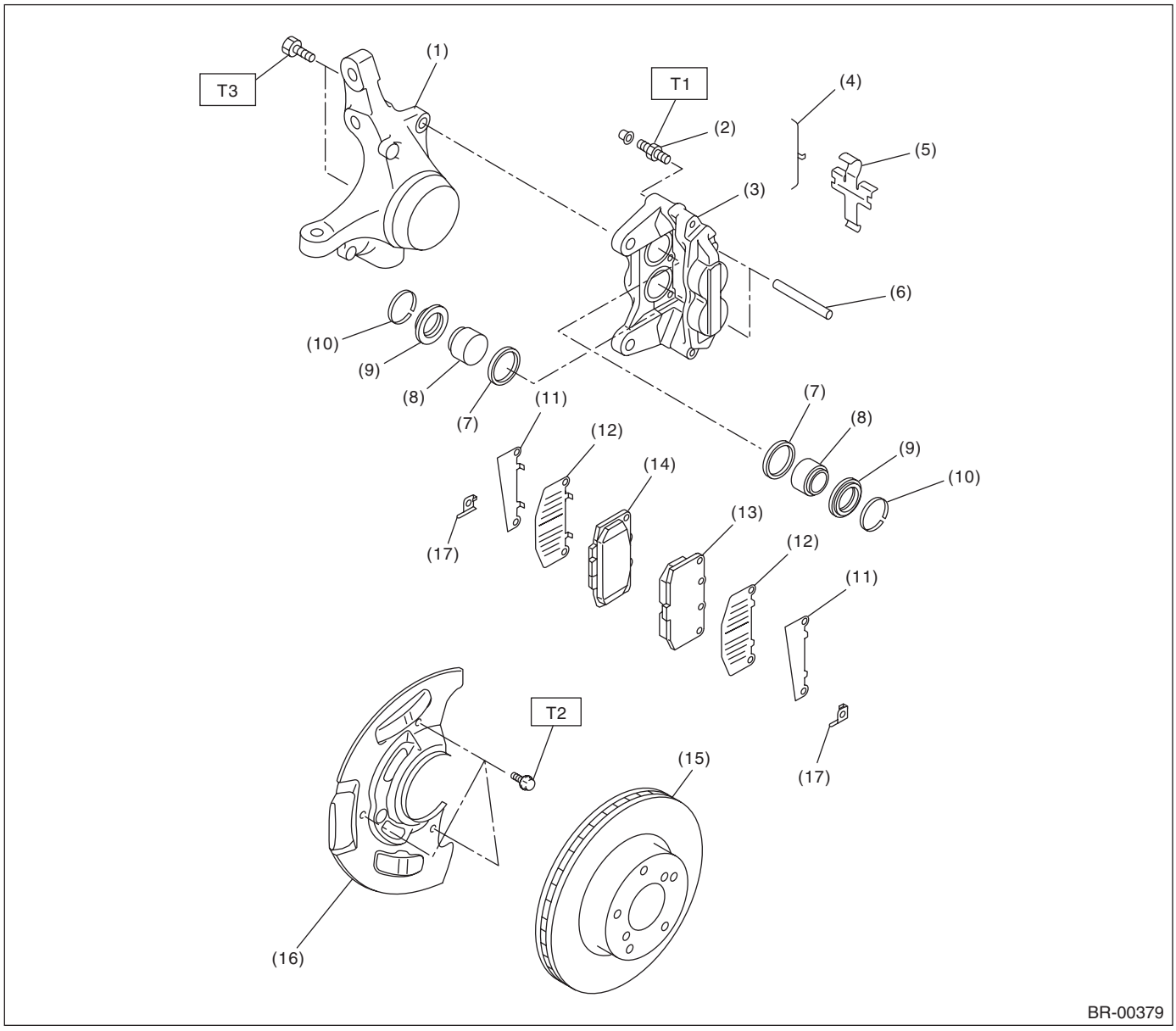

(1)	Housing	(9)	Piston boot	(16)	Disc cover
(2)	Air bleeder screw	(10)	Boot ring	(17)	Spacer
(3)	Caliper body	(11)	Outer shim		
(4)	M clip	(12)	Inner shim		
(5)	Cross spring	(13)	Pad (Outside)		
(6)	Pad pin	(14)	Pad (Inside)		
(7)	Piston seal	(15)	Disc rotor		
(8)	Piston				

Tightening torque:N·m (kgf-m, ft-lb)

T1: 8 (0.8, 5.8)

T2: 18 (1.8, 13.0)

T3: 80 (8.2, 59)

17-inch type

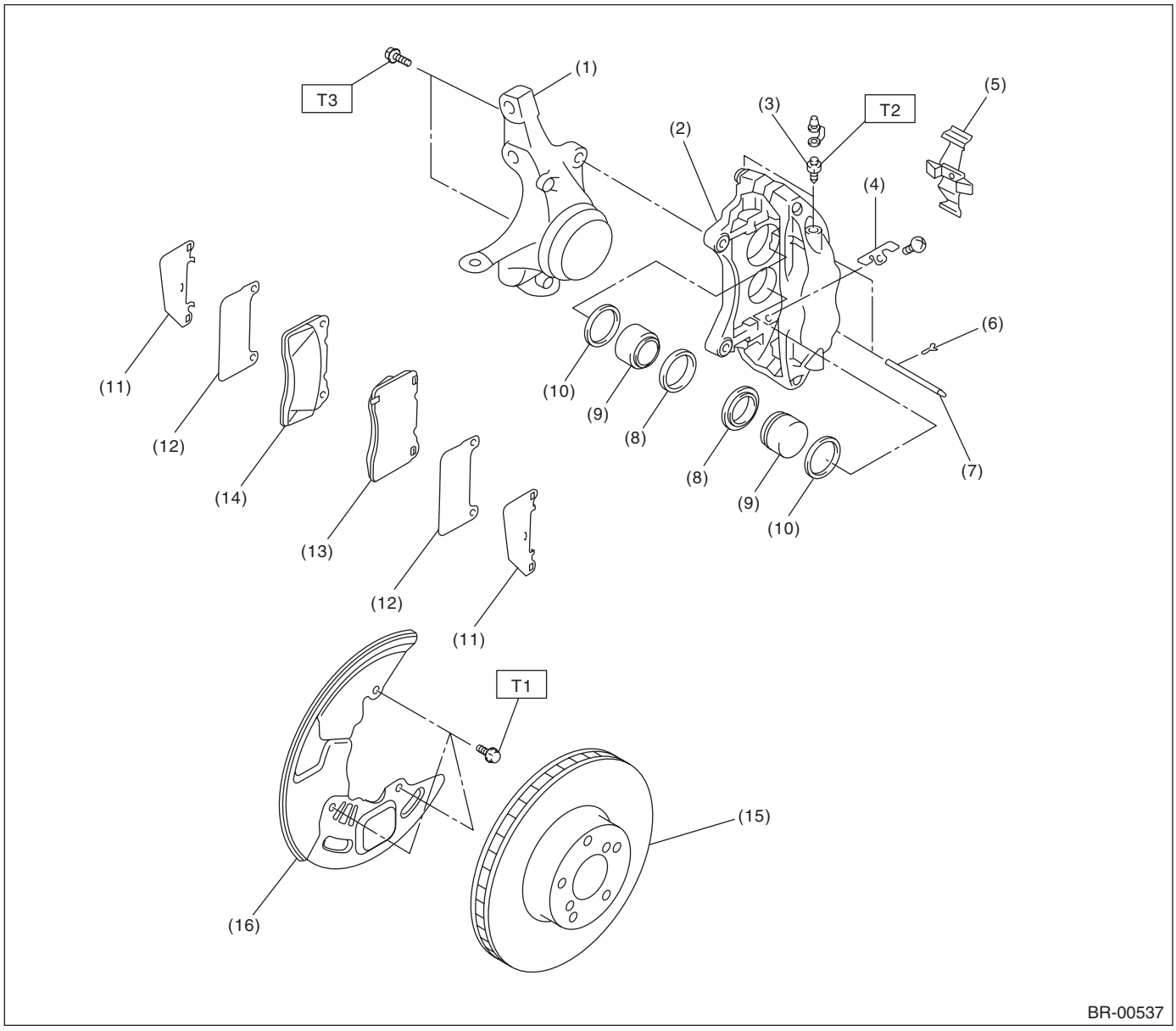

(1)	Housing	(8)	Piston boot	(15)	Disc rotor
(2)	Caliper body	(9)	Piston	(16)	Disc cover
(3)	Air bleeder screw	(10)	Piston seal		
(4)	Guide plate	(11)	Pad shim (Outside)		
(5)	Cross spring	(12)	Pad shim (Inside)		
(6)	Clip	(13)	Pad (Outside)		
(7)	Pad pin	(14)	Pad (Inside)		

Tightening torque:N·m (kgf-m, ft-lb)

T1: 18 (1.8, 13.0)
T2: 20 (2.0, 14.5)
T3: 155 (15.8, 114.3)

2. REAR DISC BRAKE

14-inch type

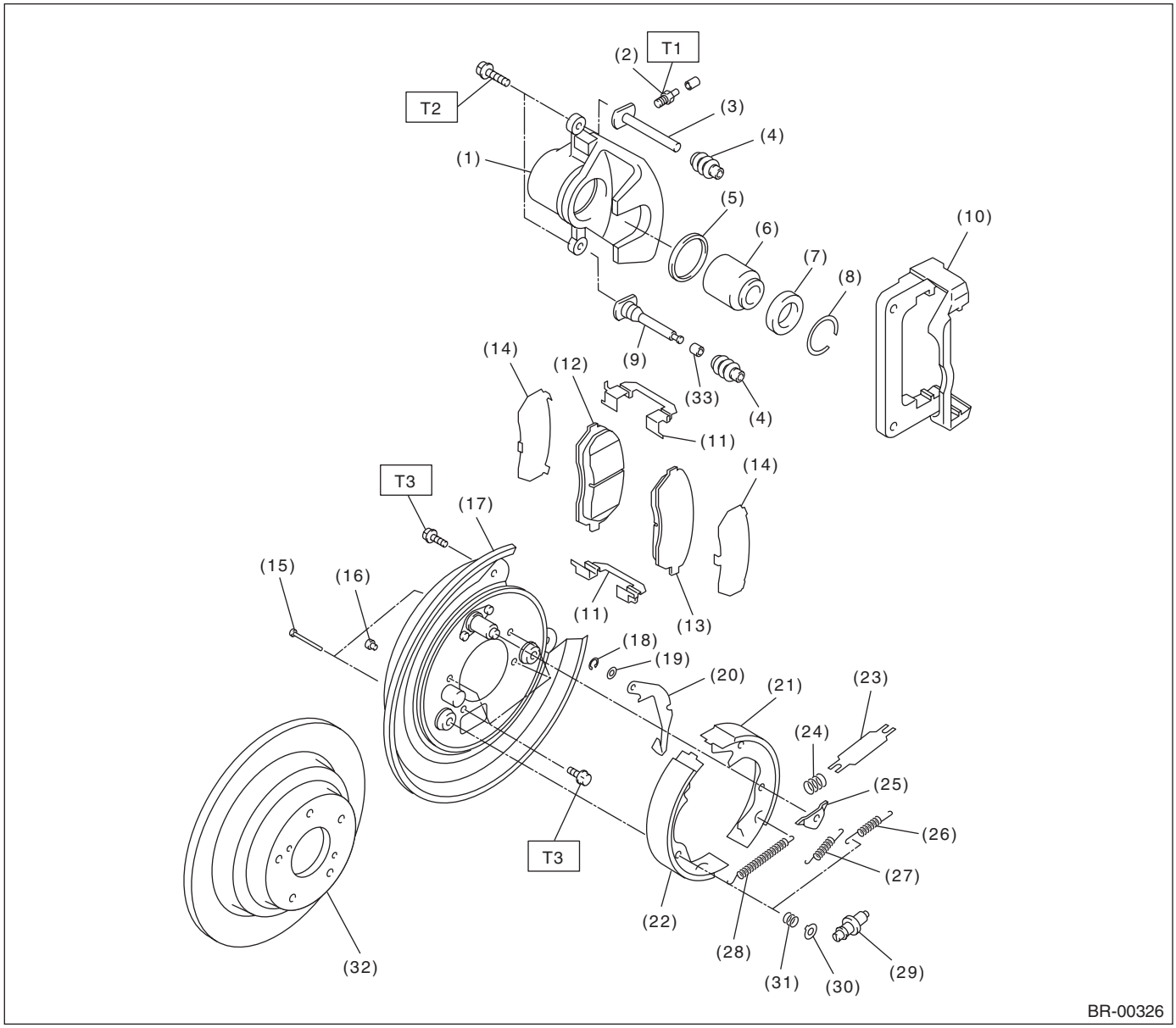

(1)	Caliper body	(14)	Shim	(27)	Primary shoe return spring
(2)	Air bleeder screw	(15)	Shoe hold-down pin	(28)	Adjusting spring
(3)	Guide pin (Green)	(16)	Cover	(29)	Adjuster
(4)	Pin boot	(17)	Back plate	(30)	Shoe hold-down cup
(5)	Piston seal	(18)	Retainer	(31)	Shoe hold-down spring
(6)	Piston	(19)	Spring washer	(32)	Disc rotor
(7)	Piston boot	(20)	Parking brake lever	(33)	Bushing
(8)	Boot ring	(21)	Parking brake shoe (Secondary)		
(9)	Lock pin (Yellow)	(22)	Parking brake shoe (Primary)		
(10)	Support	(23)	Strut		
(11)	Pad clip	(24)	Strut shoe spring		
(12)	Inner pad	(25)	Shoe guide plate		
(13)	Outer pad	(26)	Secondary shoe return spring		

Tightening torque:N·m (kgf-m, ft-lb)

T1: 8 (0.8, 5.8)

T2: 37 (3.8, 27.5)

T3: 53 (5.4, 39.1)

15-inch type

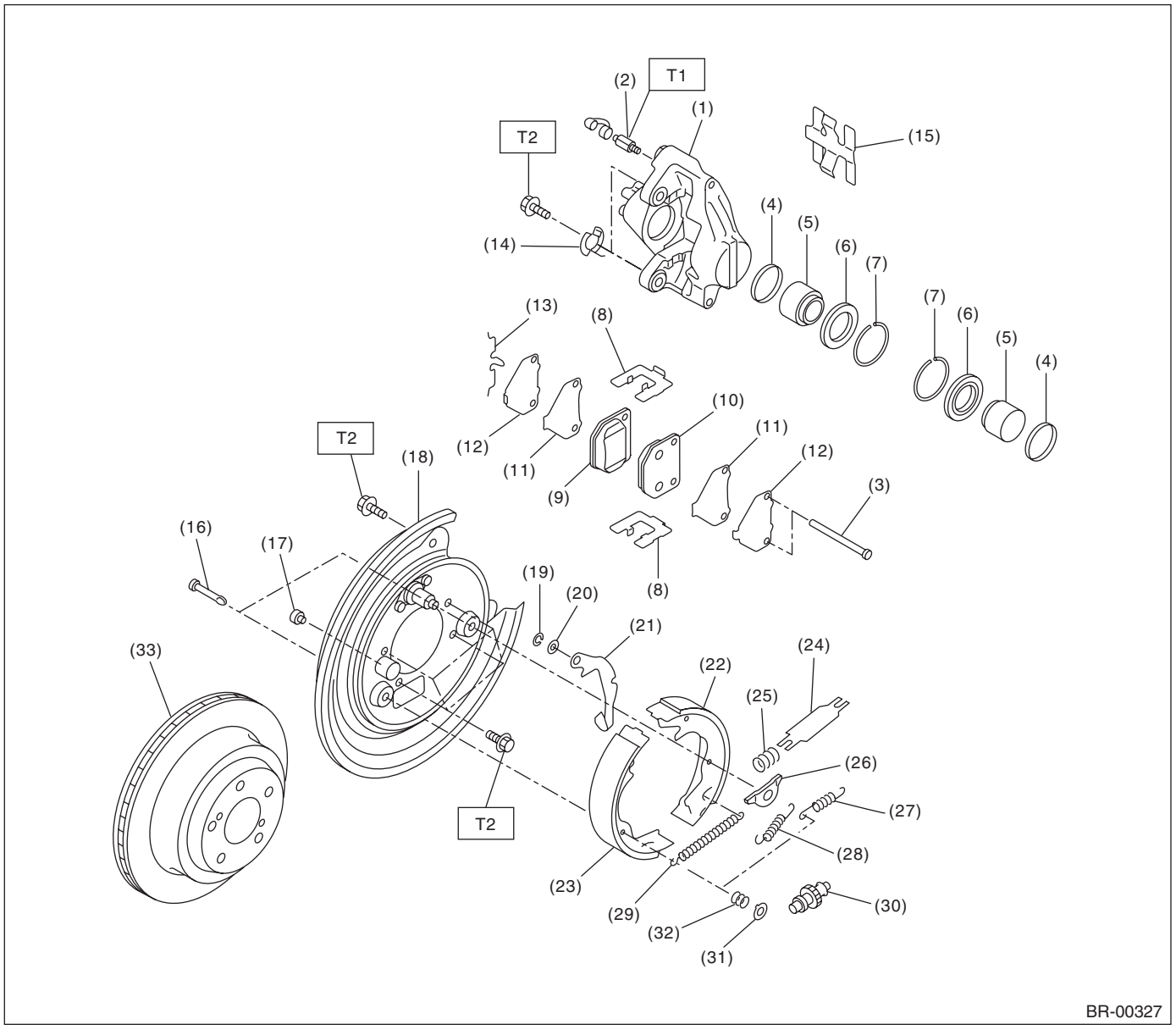

(1)	Caliper body	(14)	Washer	(26)	Shoe guide plate
(2)	Air bleeder screw	(15)	Cross spring	(27)	Secondary shoe return spring
(3)	Pad pin	(16)	Shoe hold-down pin	(28)	Primary shoe return spring
(4)	Piston seal	(17)	Cover	(29)	Adjusting spring
(5)	Piston	(18)	Back plate	(30)	Adjuster
(6)	Piston boot	(19)	Retainer	(31)	Shoe hold-down cup
(7)	Boot ring	(20)	Spring washer	(32)	Shoe hold-down spring
(8)	Pad clip	(21)	Parking brake lever	(33)	Disc rotor
(9)	Inner pad	(22)	Parking brake shoe (Secondary)		
(10)	Outer pad	(23)	Parking brake shoe (Primary)		
(11)	Inner shim	(24)	Strut		
(12)	Outer shim	(25)	Strut shoe spring		
(13)	M clip				

Tightening torque:N·m (kgf-m, ft-lb)

T1: 8 (0.8, 5.8)

T2: 53 (5.4, 39.1)

17-inch type

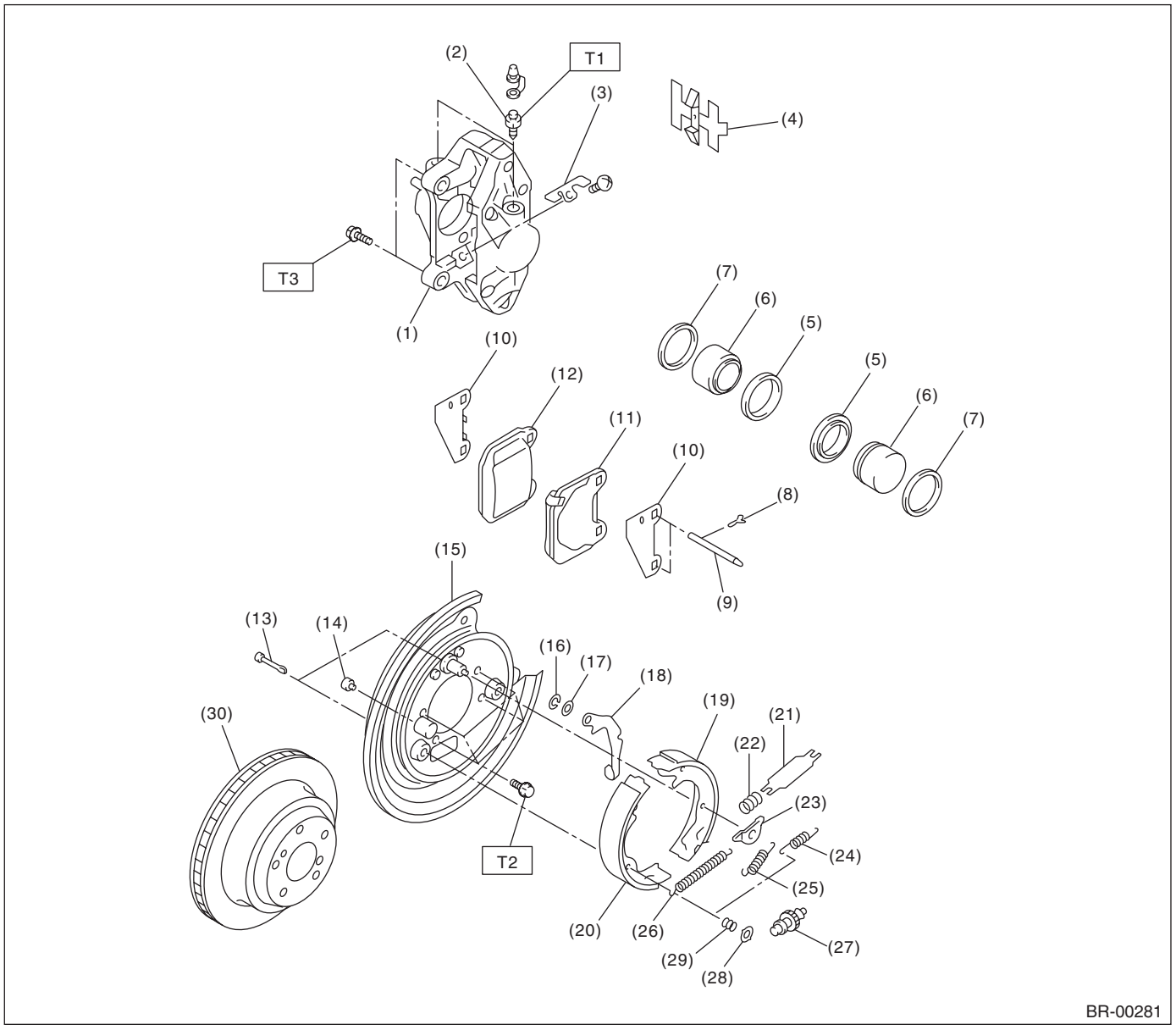

(1)	Caliper body	(13)	Shoe hold-down pin	(25)	Primary shoe return spring
(2)	Air bleeder screw	(14)	Cover	(26)	Adjusting spring
(3)	Guide plate	(15)	Back plate	(27)	Adjuster
(4)	Cross spring	(16)	Retainer	(28)	Shoe hold-down cup
(5)	Piston boot	(17)	Spring washer	(29)	Shoe hold-down spring
(6)	Piston	(18)	Parking brake lever	(30)	Disc rotor
(7)	Piston seal	(19)	Parking brake shoe (Secondary)		
(8)	Clip	(20)	Parking brake shoe (Primary)		
(9)	Pad pin	(21)	Strut		
(10)	Pad shim	(22)	Strut shoe spring		
(11)	Pad (Outside)	(23)	Shoe guide plate		
(12)	Pad (Inside)	(24)	Secondary shoe return spring		

Tightening torque:N·m (kgf-m, ft-lb)

T1: 20 (2.0, 14.5)

T2: 53 (5.4, 39.1)

T3: 65 (6.6, 47.9)

3. MASTER CYLINDER

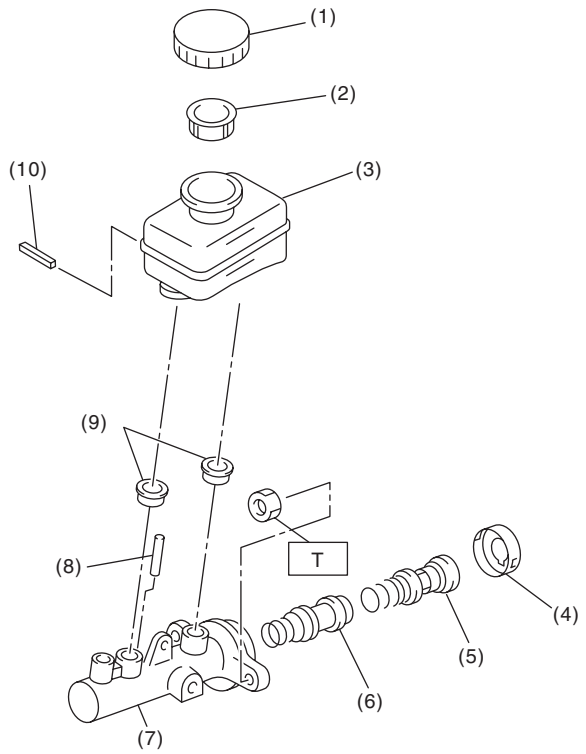

(1) Cap
(2) Filter
(3) Reservoir tank
(4) Piston retainer
(5) Primary piston
(6) Secondary piston
(7) Cylinder body
(8) Cylinder pin
(9) Seal
(10) Pin

Tightening torque:N·m (kgf-m, ft-lb)
T: 15 (1.5, 10.8)

4. FRONT BRAKE PIPES AND HOSES

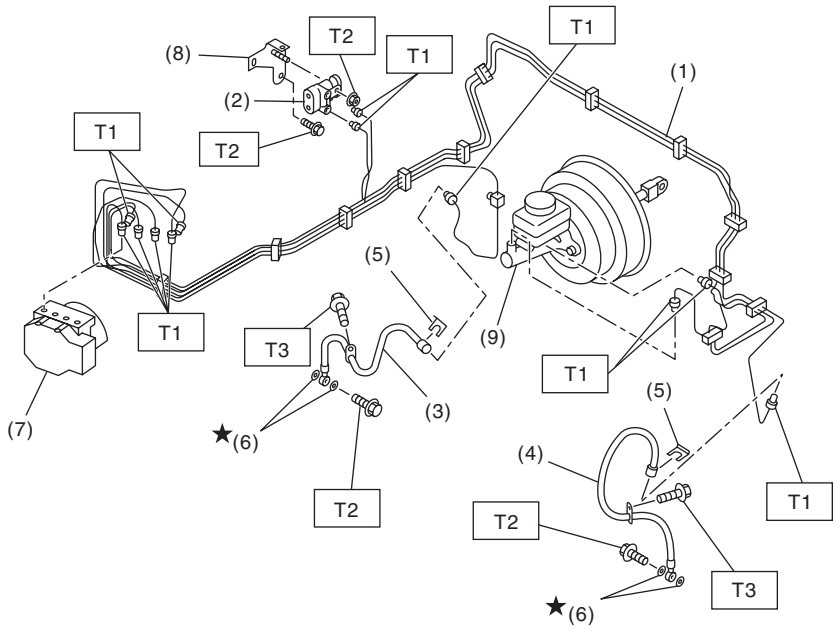

BR-00546

(1)	Front brake pipe ASSY	(6)	Gasket
(2)	Two-way connector	(7)	ABS control module and hydraulic control unit (ABSCM&H/U)
(3)	Front brake hose RH		
(4)	Front brake hose LH	(8)	Bracket
(5)	Clamp	(9)	Master cylinder

Tightening torque:N·m (kgf-m, ft-lb)

T1: 15 (1.5, 10.8)

T2: 18 (1.8, 13.0)

T3: 33 (3.4, 25)

5. CENTER AND REAR BRAKE PIPES AND HOSES

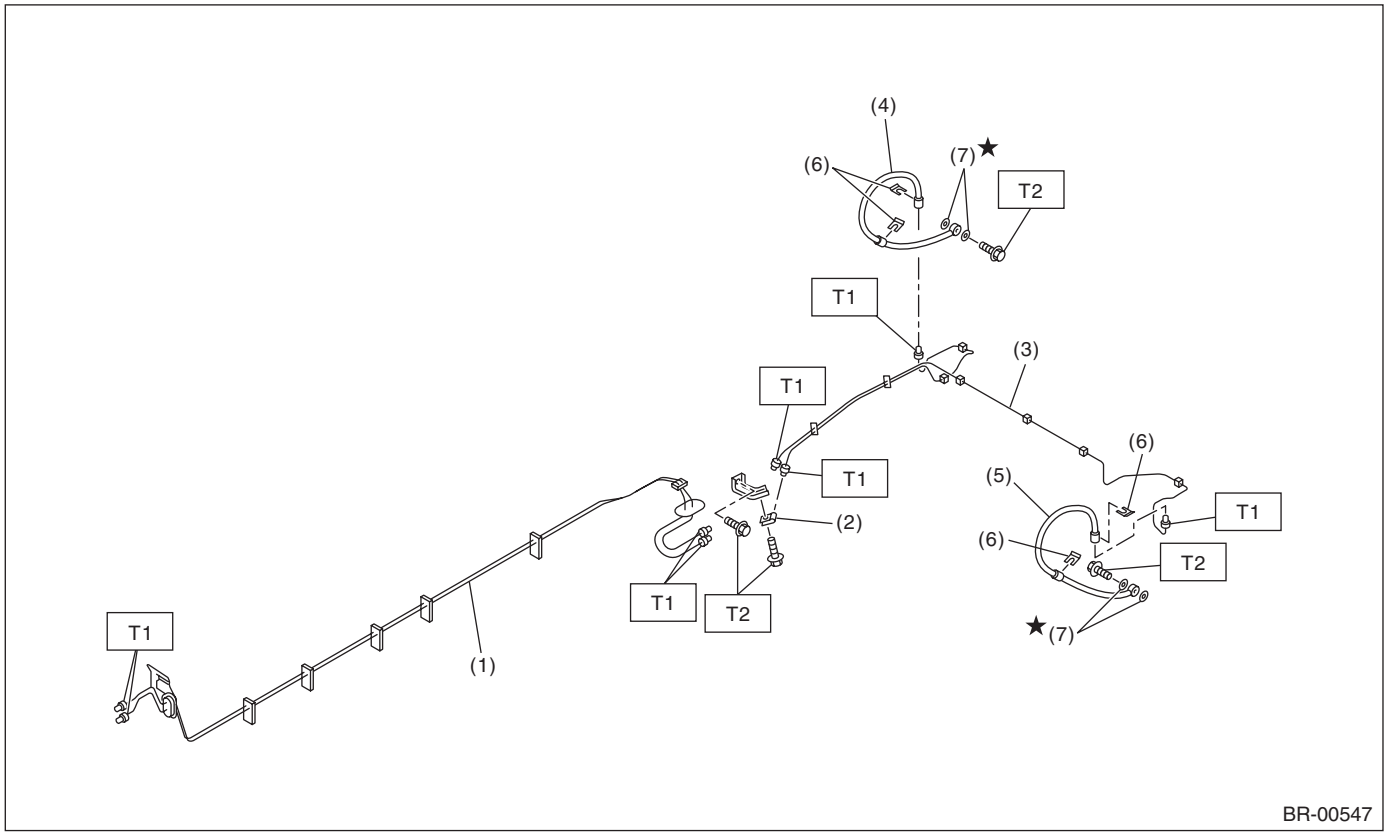

(1)	Center brake pipe ASSY	(5)	Rear brake hose LH	***Tightening torque:N·m (kgf-m, ft-lb)***
(2)	Two-way connector	(6)	Clamp	***T1: 15 (1.5, 10.8)***
(3)	Rear brake pipe ASSY	(7)	Gasket	***T2: 18 (1.8, 13.0)***
(4)	Rear brake hose RH			

6. BRAKE BOOSTER

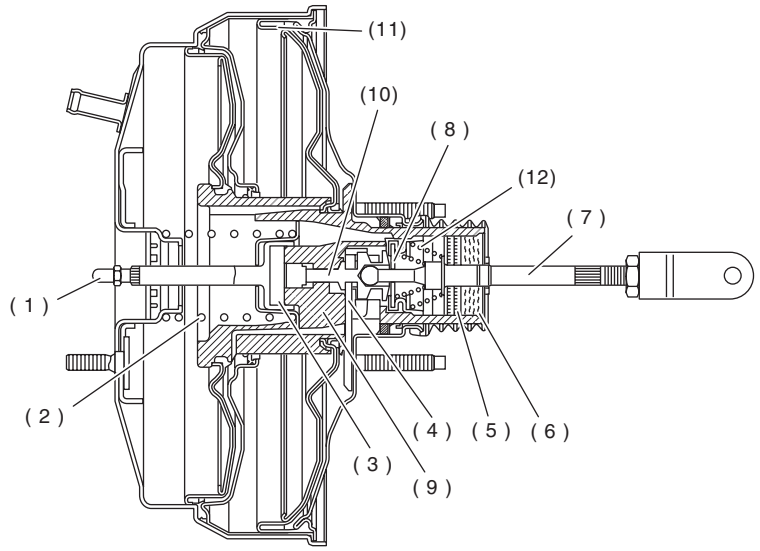

BR-00008

(1)	Push rod	(5)	Filter	(9)	Valve body
(2)	Return spring	(6)	Silencer	(10)	Plunger valve
(3)	Reaction disc	(7)	Operating rod	(11)	Diaphragm plate
(4)	Key	(8)	Poppet valve	(12)	Valve return spring

7. BRAKE PEDAL

MT model

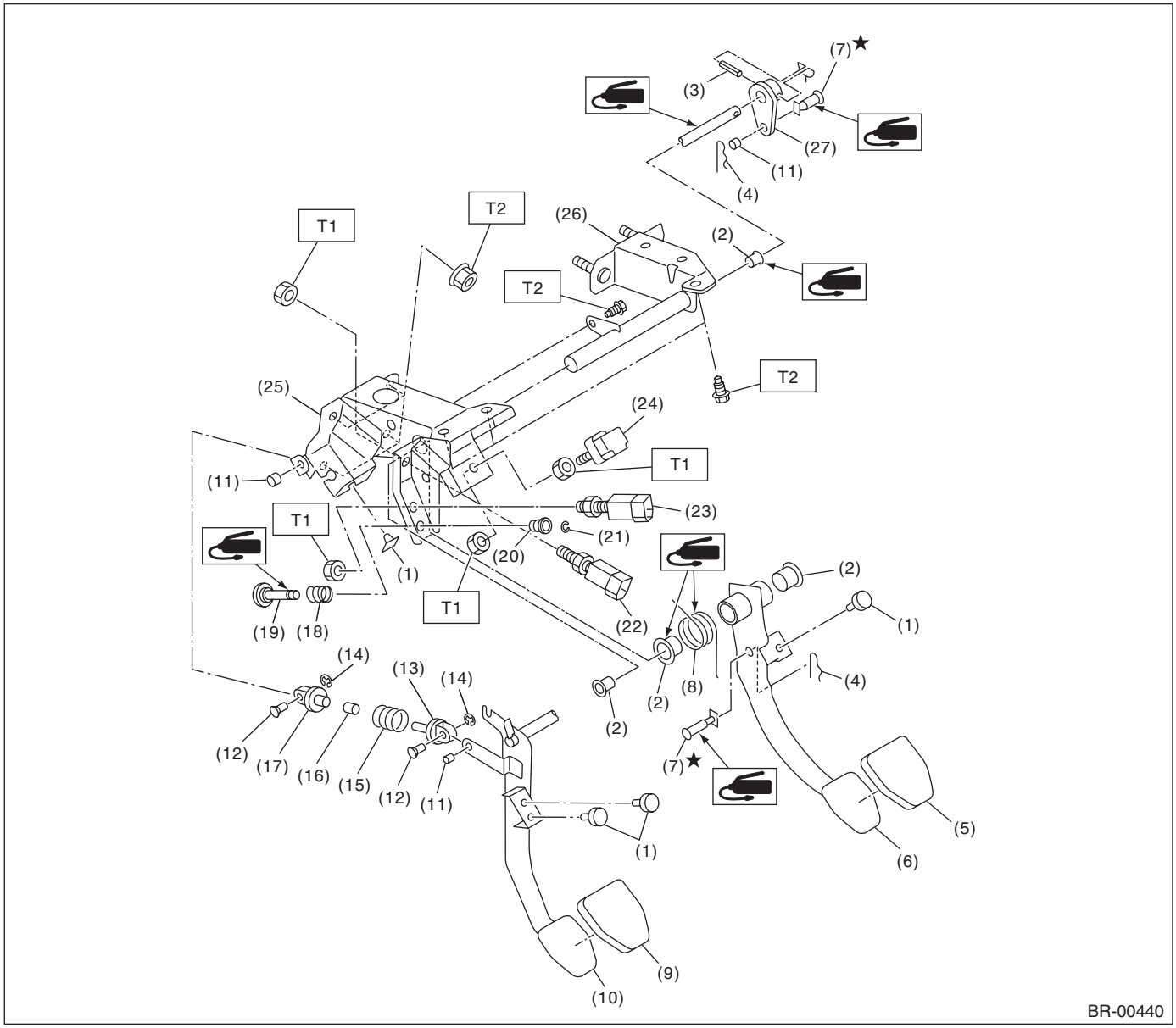

(1)	Stopper	(12)	Clutch clevis pin	(22)	Clutch switch (Starter interlock)
(2)	Bushing	(13)	Assist rod A	(23)	Clutch switch (With cruise control)
(3)	Spring pin	(14)	Clip	(24)	Stop light switch
(4)	Snap pin	(15)	Assist spring	(25)	Pedal bracket
(5)	Brake pedal pad	(16)	Assist bushing	(26)	Clutch master cylinder bracket
(6)	Brake pedal	(17)	Assist rod B	(27)	Lever
(7)	Clevis pin	(18)	Spring S		
(8)	Brake pedal spring	(19)	Rod S		
(9)	Clutch pedal pad	(20)	Bushing S		
(10)	Clutch pedal	(21)	Clip		
(11)	Bushing C				

Tightening torque:N·m (kgf-m, ft-lb)

T1: 8 (0.8, 5.8)

T2: 18 (1.8, 13.0)

AT model

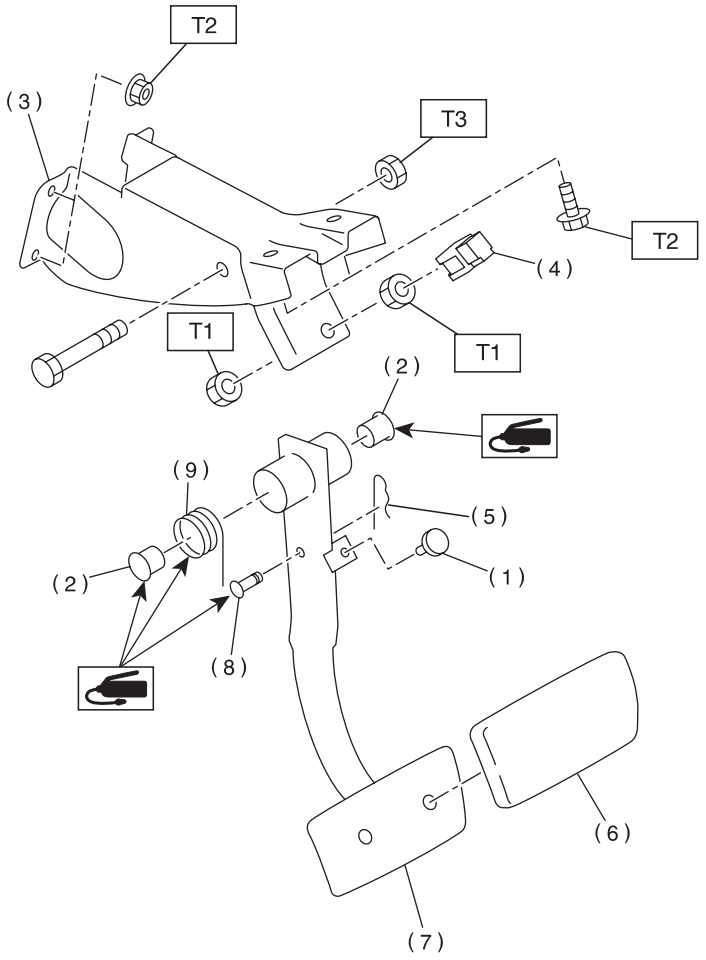

BR-00139

(1)	Stopper	(6)	Brake pedal pad	***Tightening torque:N·m (kgf-m, ft-lb)***
(2)	Bushing	(7)	Brake pedal	***T1: 8 (0.8, 5.8)***
(3)	Pedal bracket	(8)	Clevis pin	***T2: 18 (1.8, 13.0)***
(4)	Stop light switch	(9)	Brake pedal spring	***T3: 30 (3.1, 22.1)***
(5)	Snap pin			

C: CAUTION

- Wear appropriate work clothing, including a cap, protective goggles and protective shoes when performing any work.
- Before removal, installation or disassembly, be sure to clarify the failure. Avoid unnecessary removal, installation, disassembly and replacement.
- Use SUBARU genuine grease etc. or equivalent. Do not mix grease etc. of different grades or manufacturers.
- Before securing a part in a vise, place cushioning material such as wood blocks, aluminum plate or cloth between the part and the vise.
- Be sure to tighten fasteners including bolts and nuts to the specified torque.
- Place shop jacks or rigid racks at the specified points.

D: PREPARATION TOOL

1. GENERAL TOOL

TOOL NAME	REMARKS
Snap ring pliers	Used for removing and installing snap rings.